B1 A101 **DEDUCT ALTERNATE # 1**
1/8" = 1'-0"

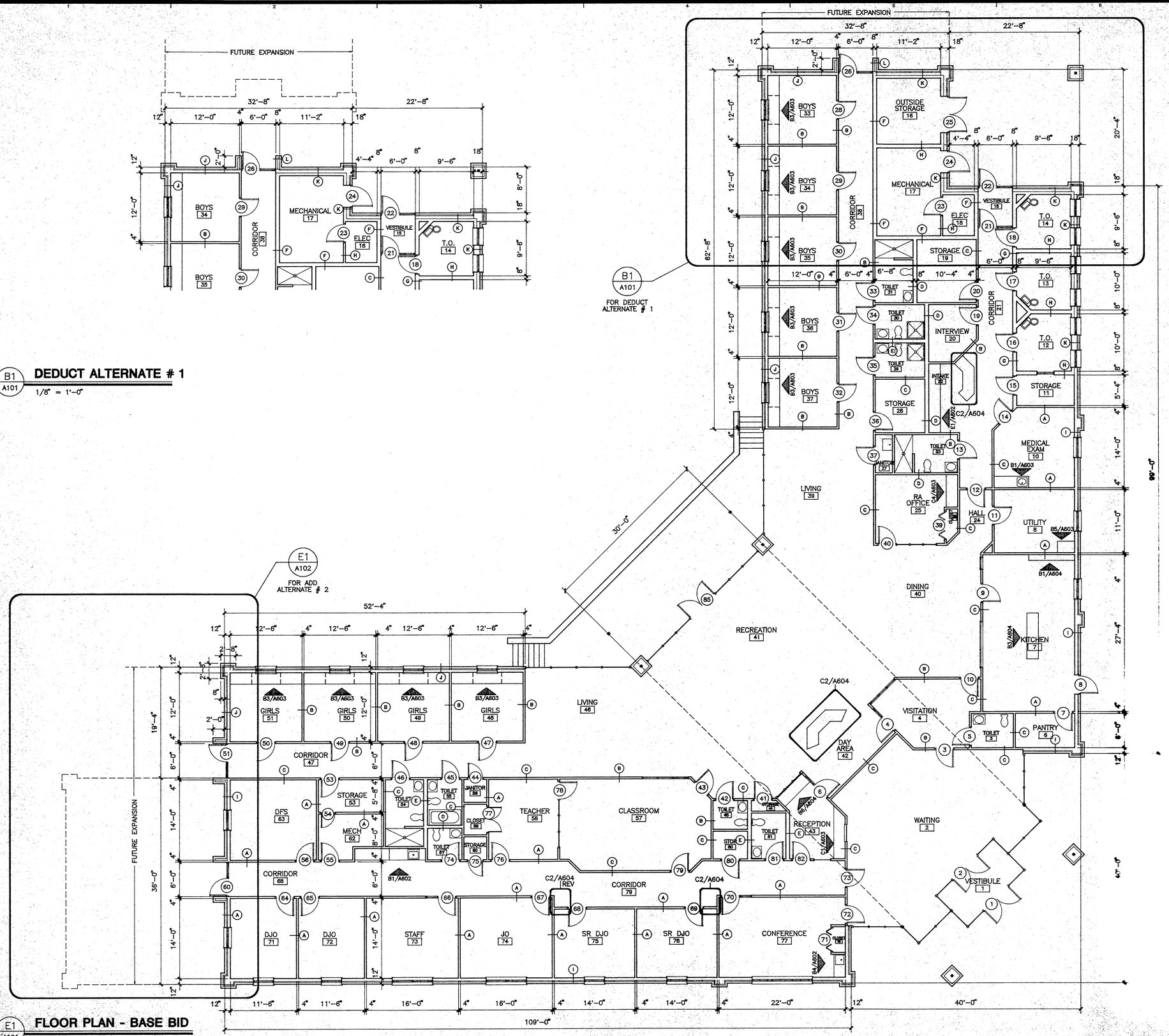

E1 A101 **FLOOR PLAN - BASE BID**
1/8" = 1'-0"

THEISS ENGINEERS, INC.
STRUCTURAL ENGINEERS
ZURHEIDE-HERRMANN, Inc.
MECHANICAL/ELECTRICAL ENGINEERS
W. MIT SANTEE INC. ASSOCIATES
KITCHEN CONSULTANTS

The Architects Alliance Inc.

FLOOR PLAN

BLAIR FAMILY CENTER
COLE COUNTY COMMISSION
400 STADIUM BOULEVARD
JEFFERSON CITY, MISSOURI

PROJECT NO. [illegible]
DATE APRIL [illegible]

A101
SHEET 1 OF [illegible]

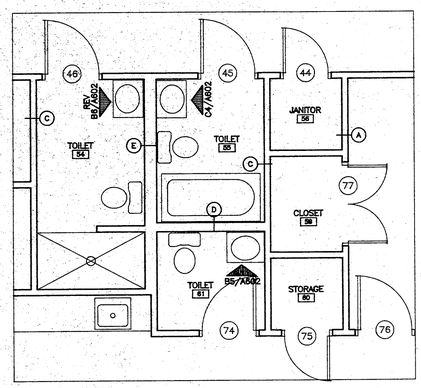

B1 A104 **ENLARGED FLOOR PLAN**
1/4" = 1'-0"

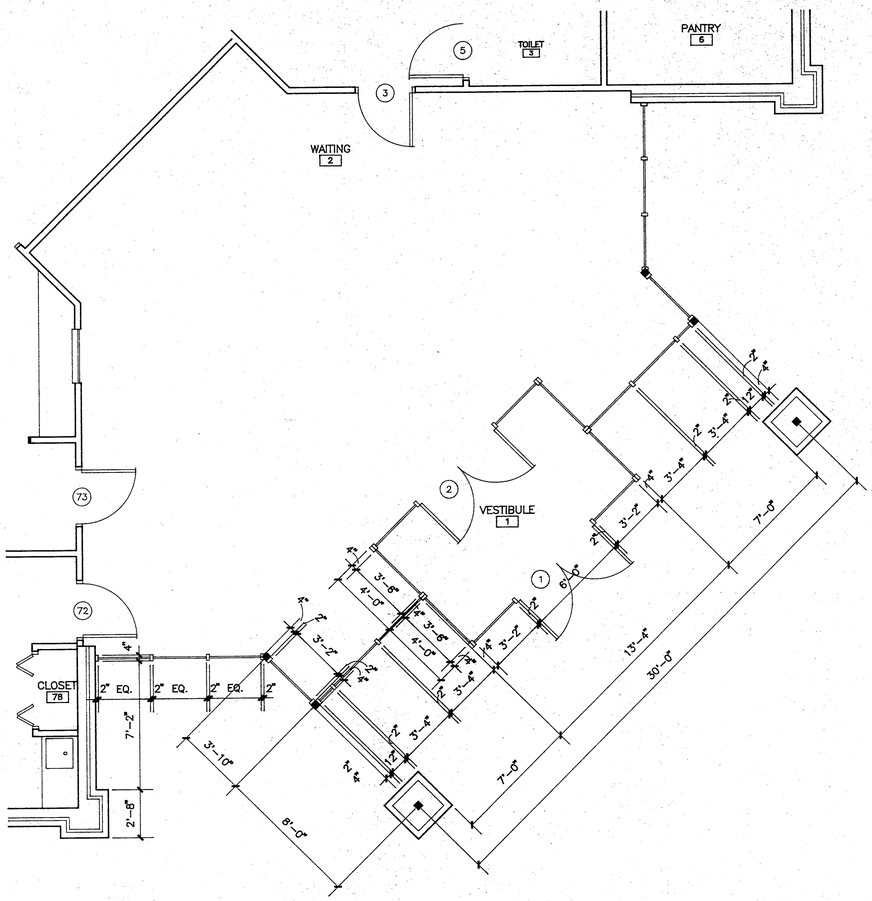

D3 A104 **ENTRANCE AREA**
1/4" = 1'-0"

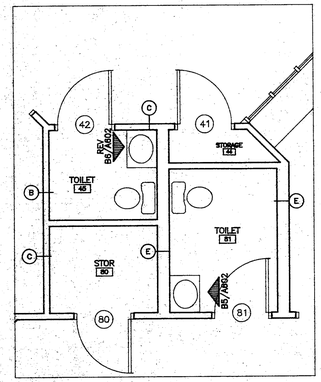

D1 A104 **ENLARGED FLOOR PLAN**
1/4" = 1'-0"

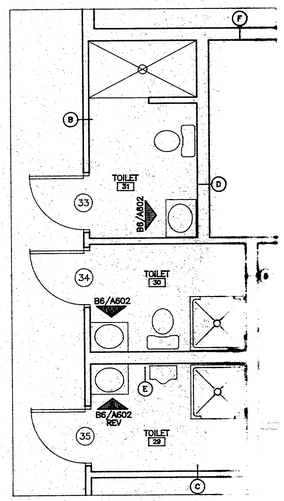

E6 A104 **ENLARGED FLOOR PLAN**
1/4" = 1'-0"

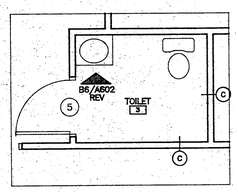

E1 A104 **ENLARGED FLOOR PLAN**
1/4" = 1'-0"

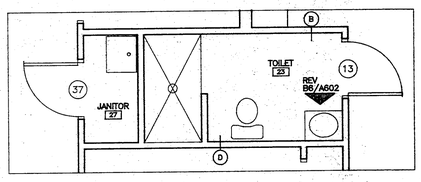

E3 A104 **ENLARGED FLOOR PLAN**
1/4" = 1'-0"

THEISS ENGINEERS, INC.
STRUCTURAL ENGINEERS
ZURHEIDE-HERRMANN, Inc.
MECHANICAL/ELECTRICAL ENGINEERS
W. MILT SANTEE AND ASSOCIATES
CIVIL CONSULTANTS

The Architects Alliance Inc.

FLOOR PLAN

BLAIR FAMILY CENTER
GOLF COUNTY COMMISSION
400 STADIUM BOULEVARD
JEFFERSON CITY, MISSOURI

PROJECT NO. [illegible]
DATE APRIL 2, [illegible]

A104
SHEET 1 OF

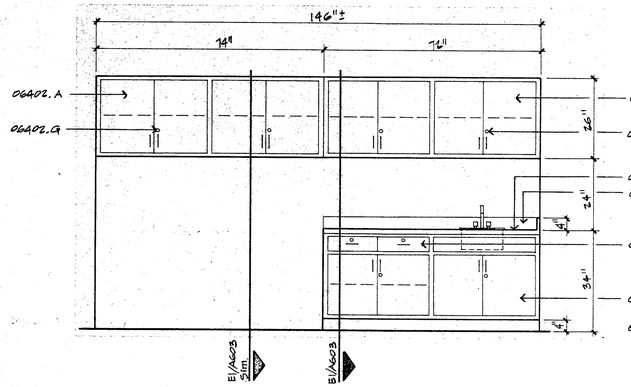

B1 68 CORRIDOR ELEVATION 1/2"= 1'-0"

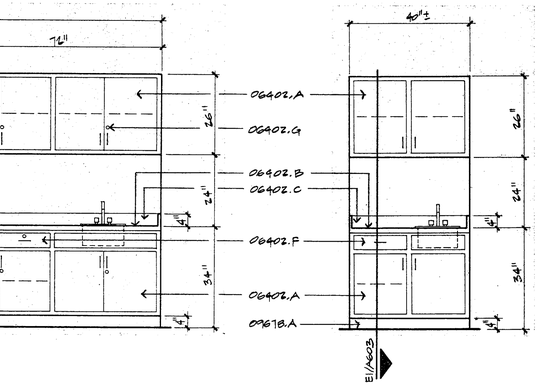

B3 66 CNSLR/STAFF/CONF. ELEVATION 1/2"= 1'-0"

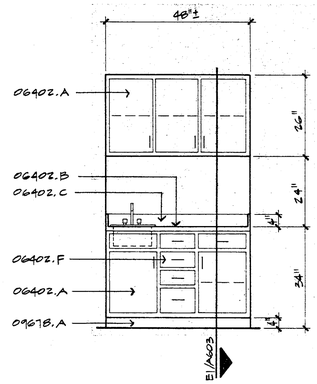

B4 77 CONFERENCE ELEVATION 1/2"= 1'-0"

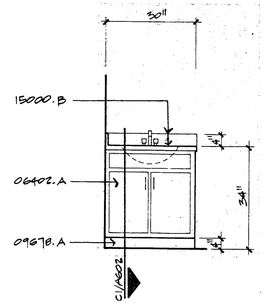

B5 61,81 TOILET ELEVATION 1/2"= 1'-0"

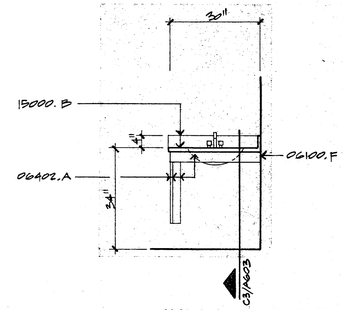

B6 30,31/3,23,29,45,54 Rev. TOILET ELEVATION 1/2"= 1'-0"

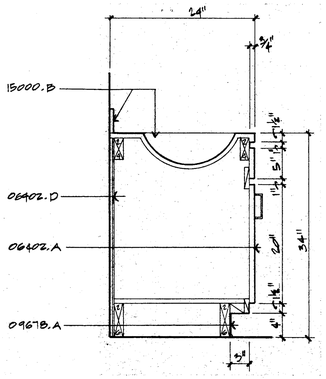

C1 SECTION 1"= 1'-0"

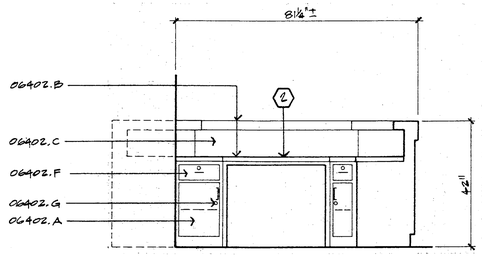

C3 22 INTAKE ELEVATION 1/2"= 1'-0"

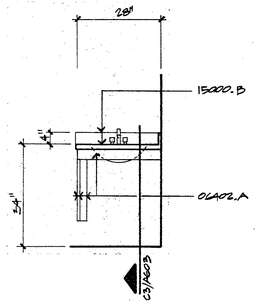

C4 55 TOILET ELEVATION 1/2"= 1'-0"

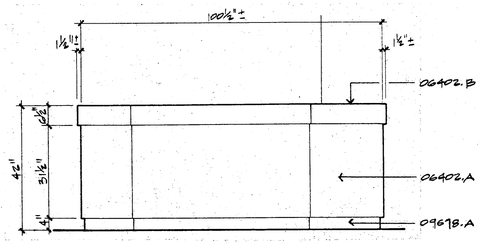

C5 22 INTAKE ELEVATION 1/2"= 1'-0"

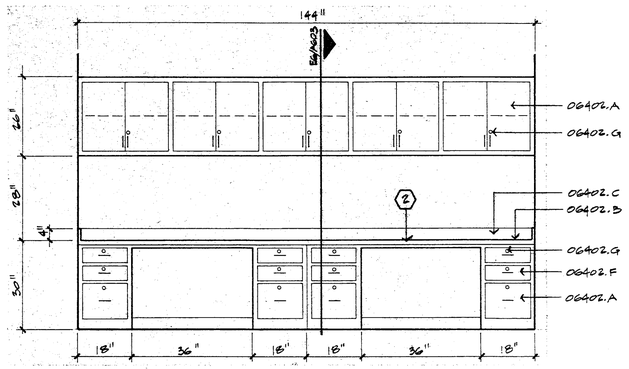

E1 22 INTAKE ELEVATION 1/2"= 1'-0"

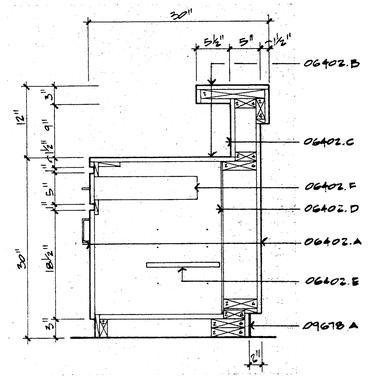

E4 SECTION 1"= 1'-0"

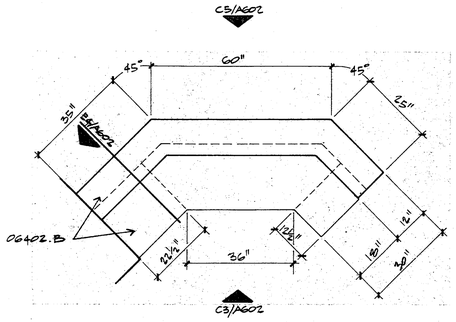

E5 22 INTAKE PLAN VIEW 1/2"= 1'-0"

THEISS ENGINEERS, INC.
STRUCTURAL ENGINEERS
ZURHEIDE-HERRMANN, Inc.
MECHANICAL/ELECTRICAL ENGINEERS
W. MILT SANTEE and ASSOCIATES
KITCHEN CONSULTANTS

The Architects Alliance Inc.
Jefferson City Missouri

CASEWORK

BLAIR FAMILY CENTER
COLE COUNTY COMMISSION
400 STADIUM BOULEVARD
JEFFERSON CITY, MISSOURI

PROJECT NO. 9233
DATE:
A602
SHEET OF

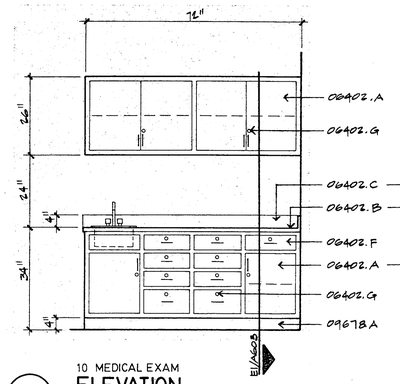

10 MEDICAL EXAM
B1 ELEVATION
1/2"= 1'- 0"

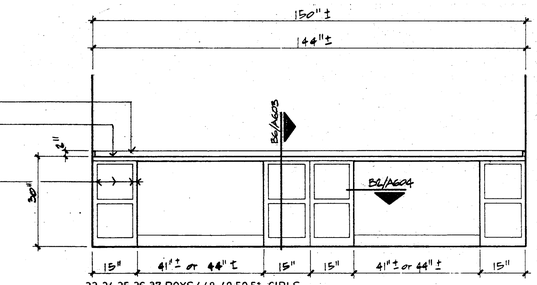

33,34,35,36,37 BOYS/ 48,49,50,51 GIRLS
B3 ELEVATION
1/2"= 1'- 0"

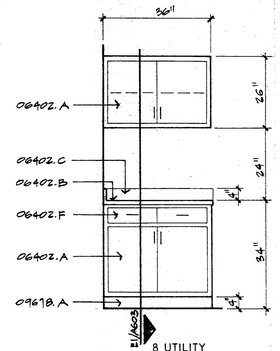

8 UTILITY
B5 ELEVATION
1/2"= 1'- 0"

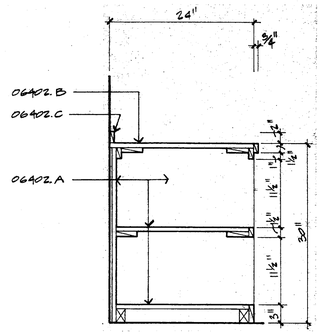

B6 SECTION
1"= 1'- 0"

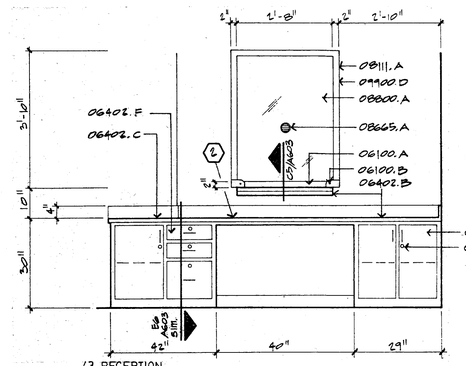

43 RECEPTION
C1 ELEVATION
1/2"= 1'- 0"

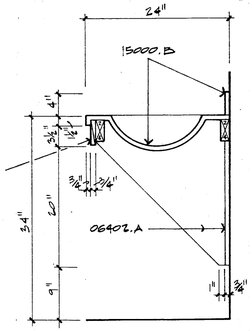

C3 SECTION
1"= 1'- 0"

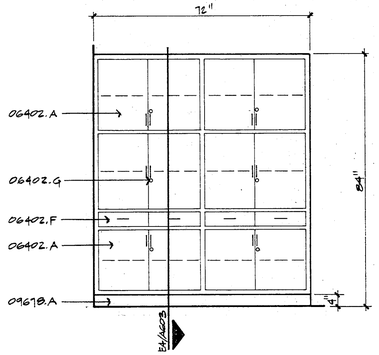

25 RA OFFICE
C4 ELEVATION
1/2"= 1'- 0"

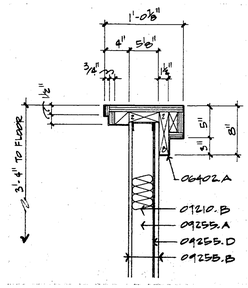

C5 SECTION
1"= 1'- 0"

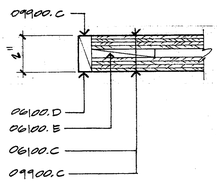

C6 DETAIL
3"= 1'- 0"

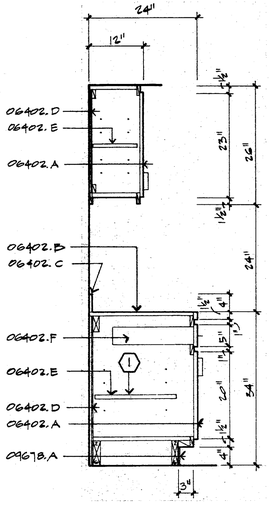

E1 SECTION
3/4"= 1'- 0"

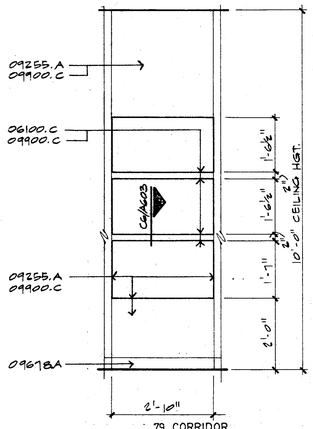

79 CORRIDOR
E3 ELEVATION
1/2"= 1'- 0"

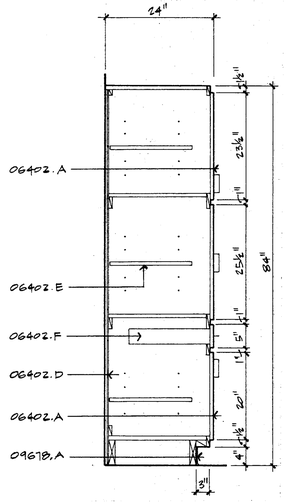

E4 SECTION
3/4"= 1'- 0"

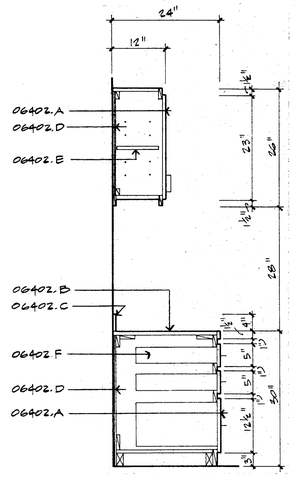

E6 SECTION
3/4"= 1'- 0"

THEISS ENGINEERS, INC.
STRUCTURAL ENGINEERS

ZURHEIDE-HERRMANN Inc.
MECHANICAL/ELECTRICAL ENGINEERS

W. MILT SANTEE and ASSOCIATES
KITCHEN CONSULTANTS

The Architects Alliance Inc.
Jefferson City

CASEWORK

BLAIR FAMILY CENTER
COLE COUNTY COMMISSION
400 STADIUM BOULEVARD
JEFFERSON CITY, MISSOURI

O:\DWG\9233\A601 03/09/93 13:16

PROJECT NO. 9233
DATE:
A603
SHEET OF

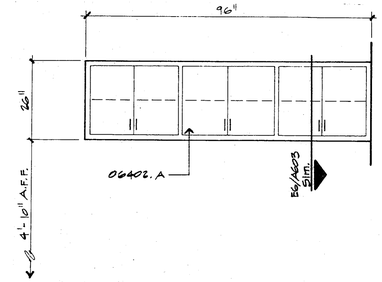

B1 7 KITCHEN ELEVATION 1/2"= 1'-0"

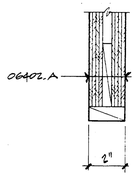

B2 DETAIL 3"= 1'-0"

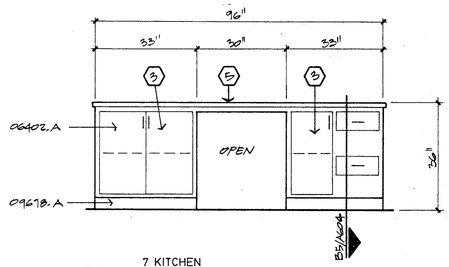

B3 7 KITCHEN ELEVATION 1/2"= 1'-0"

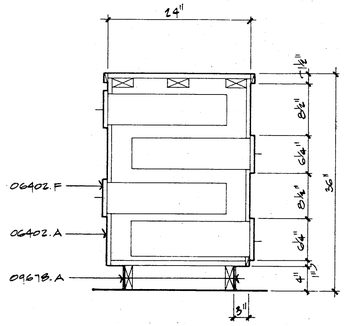

B5 SECTION 1"= 1'-0"

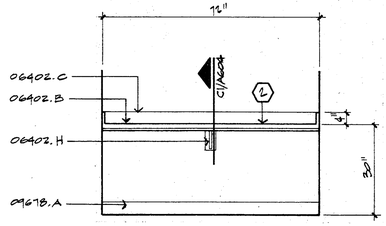

B6 43 RECEPTION ELEVATION 1/2"= 1'-0"

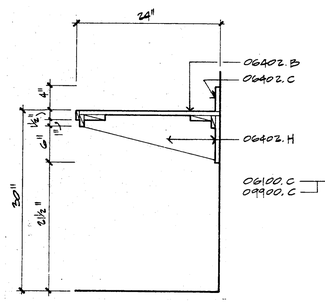

C1 SECTION 1"= 1'-0"

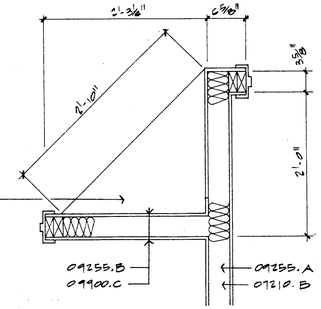

C2 79 CORRIDOR PLAN VIEW 1"= 1'-0"

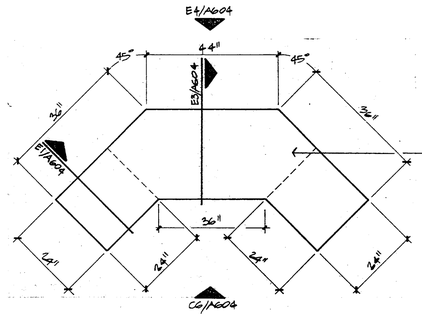

C4 42 DAY AREA PLAN VIEW 1/2"= 1'-0"

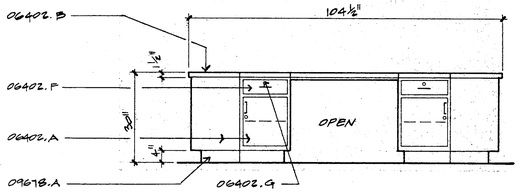

C6 42 DAY AREA ELEVATION 1/2"= 1'-0"

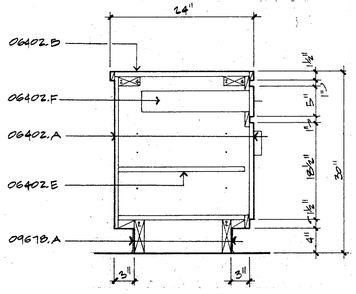

E1 SECTION 1"= 1'-0"

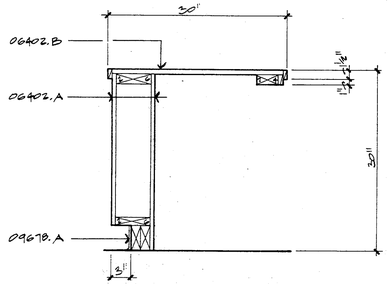

E3 SECTION 1"= 1'-0"

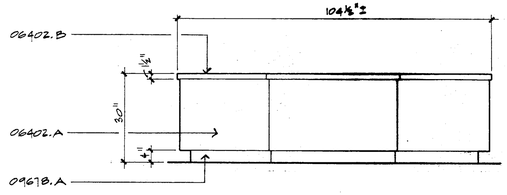

E4 42 DAY AREA ELEVATION 1/2"= 1'-0"

THEISS ENGINEERS, INC.
STRUCTURAL ENGINEERS

ZURHEIDE-HERRMANN Inc.
MECHANICAL/ELECTRICAL ENGINEERS

W. MILT SANTEE and ASSOCIATES
KITCHEN CONSULTANTS

The Architects Alliance Inc.
Jefferson City Missouri

CASEWORK

BLAIR FAMILY CENTER
COLE COUNTY COMMISSION
400 STADIUM BOULEVARD
JEFFERSON CITY, MISSOURI

C:\DWG\9237\A601 03/26/03 13:32

PROJECT NO. 9239
DATE

A604
SHEET OF

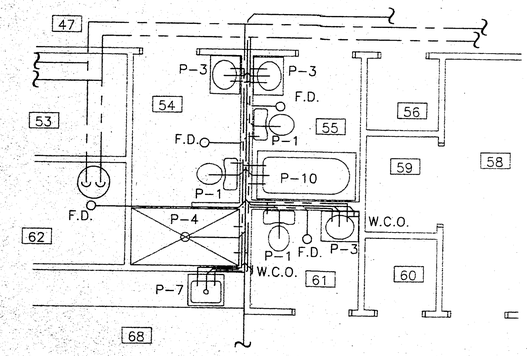

1 PARTIAL FLOOR PLAN-PLUMBING
P101 P102 1/4" = 1'-0"

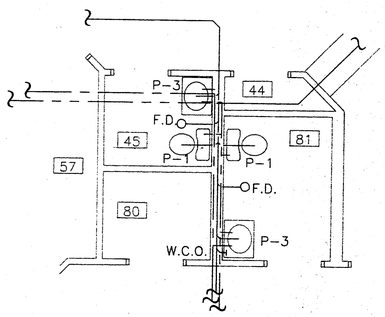

2 PARTIAL FLOOR PLAN-PLUMBING
P101 P102 1/4" = 1'-0"

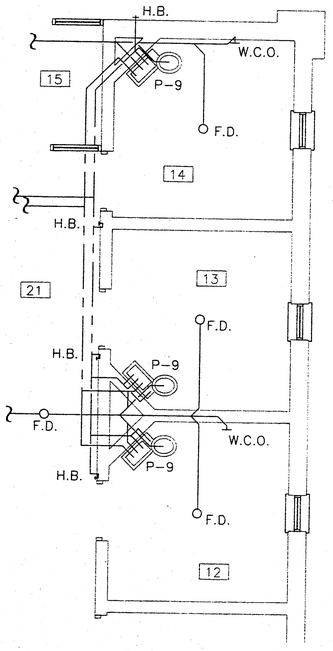

5 PARTIAL FLOOR PLAN-PLUMBING
P101 P102 1/4" = 1'-0"

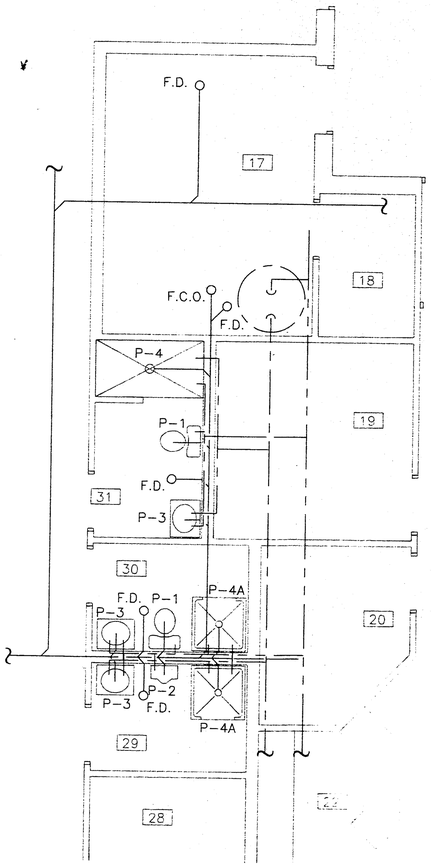

6 PARTIAL FLOOR PLAN-PLUMBING
P101 P102 1/4" = 1'-0"

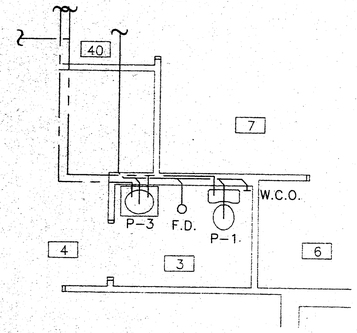

3 PARTIAL FLOOR PLAN-PLUMBING
P101 P102 1/4" = 1'-0"

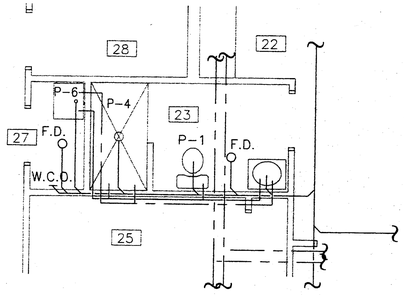

4 PARTIAL FLOOR PLAN-PLUMBING
P101 P102 1/4" = 1'-0"

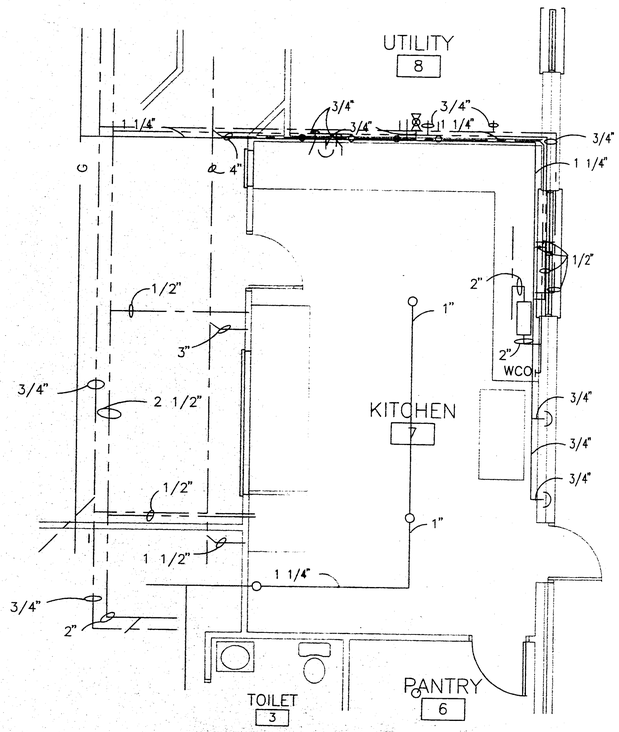

7 PARTIAL FLOOR PLAN-PLUMBING
P101 P102 1/4" = 1'-0"

DATE: 04/05/1993 17:22 DVG D:\JEFF\BLAIR\P102 JOB 2565.10 E260/A11.9

THEISS ENGINEERS, INC.
STRUCTURAL ENGINEERS
ZURHEIDE-HERRMANN,Inc.
MECHANICAL/ELECTRICAL ENGINEERS
W. MILT SANTEE and ASSOCIATES
KITCHEN CONSULTANTS

The Architects Alliance
Jefferson City Missouri

ENLARGED FLOOR PLANS PLUMBING

BLAIR FAMILY CENTER
COLE COUNTY COMMISSION
400 STADIUM BOULEVARD
JEFFERSON CITY, MISSOURI

PROJECT NO. 9233
DATE: 5 FEB 93

P102